Article-No:
1020-01-102

CmCard/M

Description

The CmCard combines WibuKey and CodeMeter in one hardware device.

- WibuBox/U+ with 16 kbyte extended memory and 10 entries for license information.
- CodeMeter Digital Rights Management system, containing a Smart-Card chip including a secure memory with a minimum of 128 kbyte including about 60 kbyte available for storing more than 1000 licenses plus additional 256 MByte flash memory which can be used as a removable drive. The basic idea of the revolutionary CodeMeter concept is that this memory can be used by many different vendors at the same time.

License Options are: Text (description of an entry), Unit Counter (number of runs or actually running time of a license), Activation Time (the license is valid from), Expiration Time (the license is valid until), Feature Map (up to 32 modules can be programmed in one Feature Map), Network License Quantity (concurrent use / floating licenses within one network), Protected Data (read-only data, up to 256 bytes), Extended Protected Data (128x256 bytes read-only data), Hidden Data (only readable with password; useful as secret/private encryption key, 128x256 bytes), Secret Data (non-readable; usable as secret/private encryption key, 128x256 bytes), User Data (unsecured 256 bytes), Customer Serial Number (256 bytes).

Used algorithms: 128 bit AES, TDES, SHA-256, 224 bit ECC.

The used SmartCard chip contains a random number generator according to FIPS140-1 and fulfills EAL 4+ (Common Criteria, not certified).

Technical Specifications

- **Interface: CardBus slot, Type II**
- **CodeMeter License memory:**
  - **Data retention: >10 years @ room temperature**
- **Flash memory:**
  - **10 years at room temperature**
- **Power supply: 3,3 V, < 350 mA**
- **Temperature: 0...45 degree C, non-condensing**
- **Case/Dimensions: 85,5 mm x 54 mm x 5 mm**
- **Weight: 30 g**

Certificates

The CodeMeter technology is covered by US 7.145.297 and other patents. The WibuCmCard is tested and qualified with the following standards:

CE-Conformity | European Certificates

Radiated emissions 150 kHz…6 GHz:

- EN 55022:2006 + A1:2007
- IEC/CISPR 22:2005, modified + A1:2005 limits for Class B equipment

Immunity: Radiated RF electromagnetic field, electrostatic discharge, injected currents (RF) unsymmetrical and fast transients (burst) unsymmetrical:

- EN 55024:1998 + A1:2001 + A2:2003
- IEC/CISPR 24:1997, modified + A1:2001 + A2:2002

International Certificates

FCC Part 15, Subpart B

VCCI 2003-04 (Japan)

All CmCards marked as RoHS are fully compliant according to EC Directives 2002/95/EC (RoHS) and 2002/96/EC (WEEE).

Ordering Information

P/N 1020-01-102: CmCard 256 MByte bulk
Other variants on request.

RoHS compliant
WEEE-Reg-No:
DE 90465365

All dimensions in millimeter. Subject to change without notice.

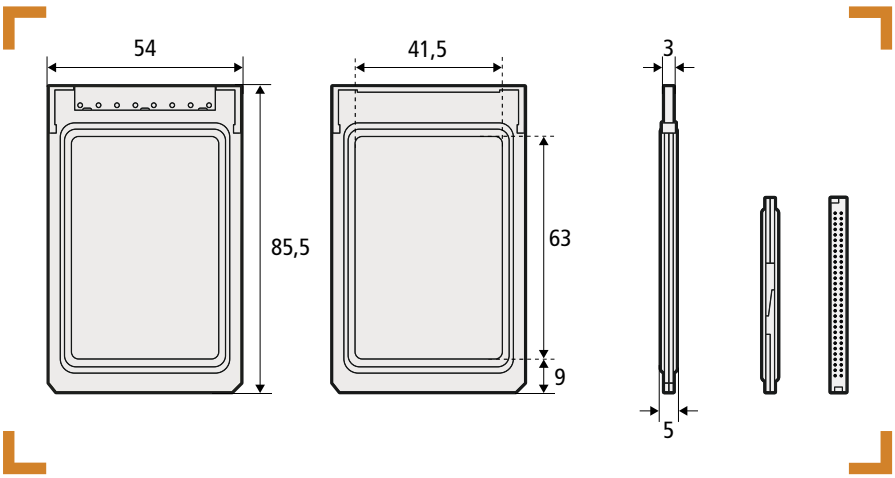

WIBU-SYSTEMS AG
Rueppurrer Strasse 52-54
D-76137 Karlsruhe
Tel: +49-721-93172-0
Fax: +49-721-93172-22
info@wibu.com
www.wibu.com

5060-023-02/20100818 © WIBU-SYSTEMS AG 2010